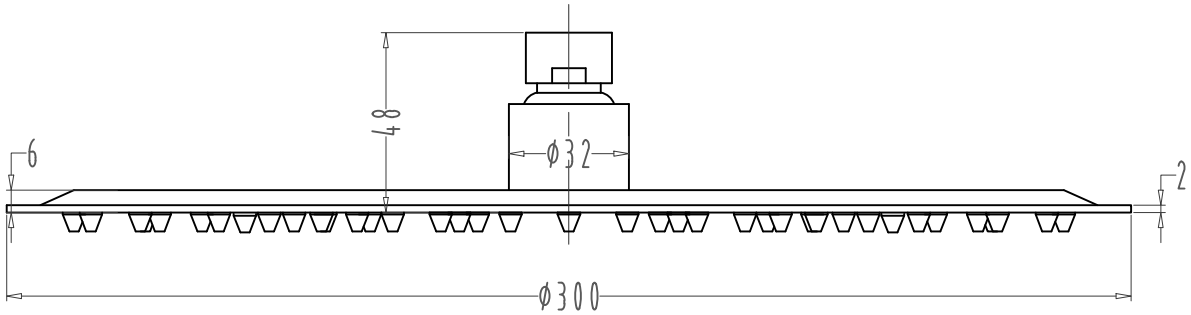

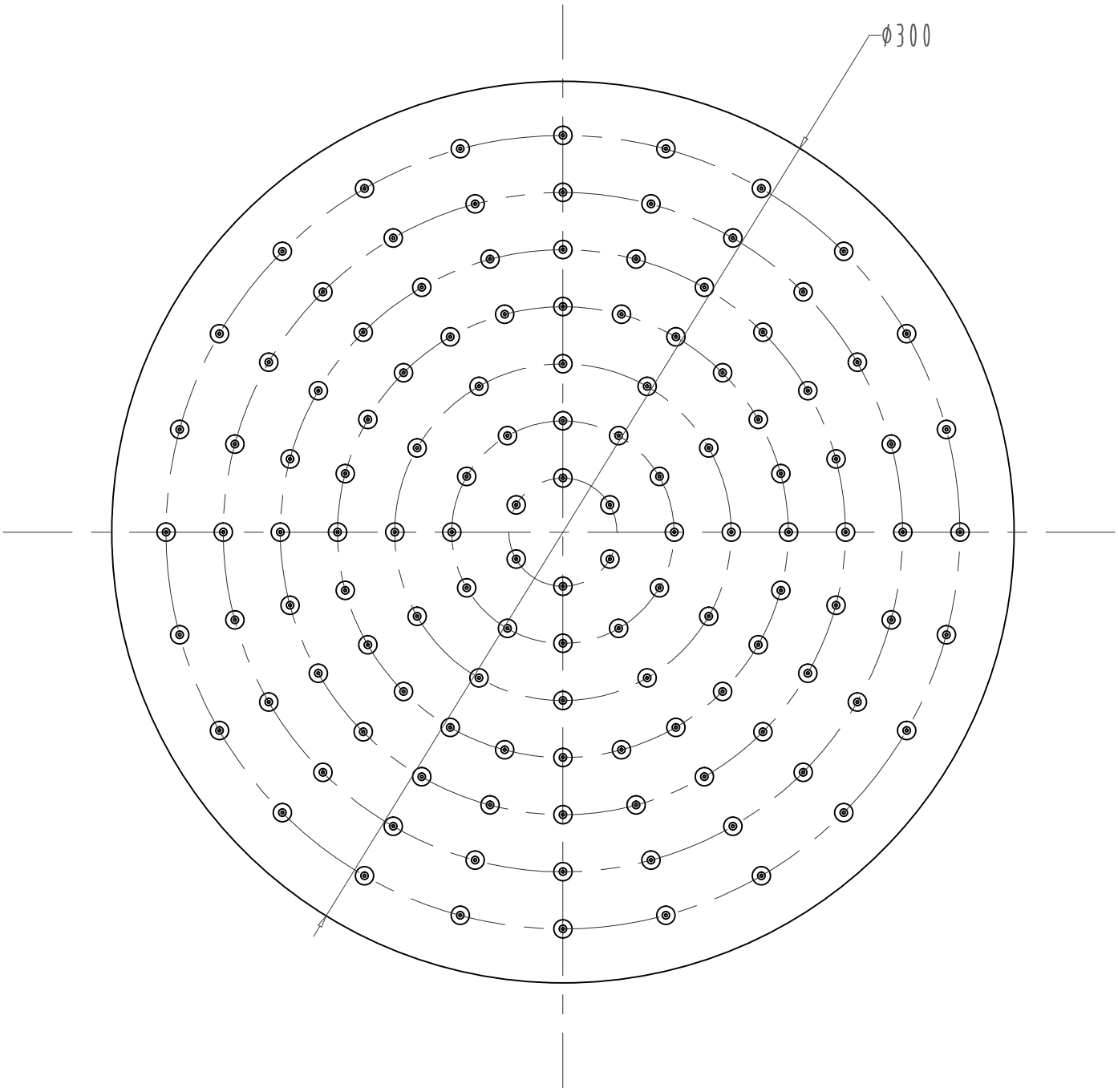

SHOWER-F160061-ULTRA THIN SS RAIN SHOWER 300MM ROUND

DATE:23.01.16